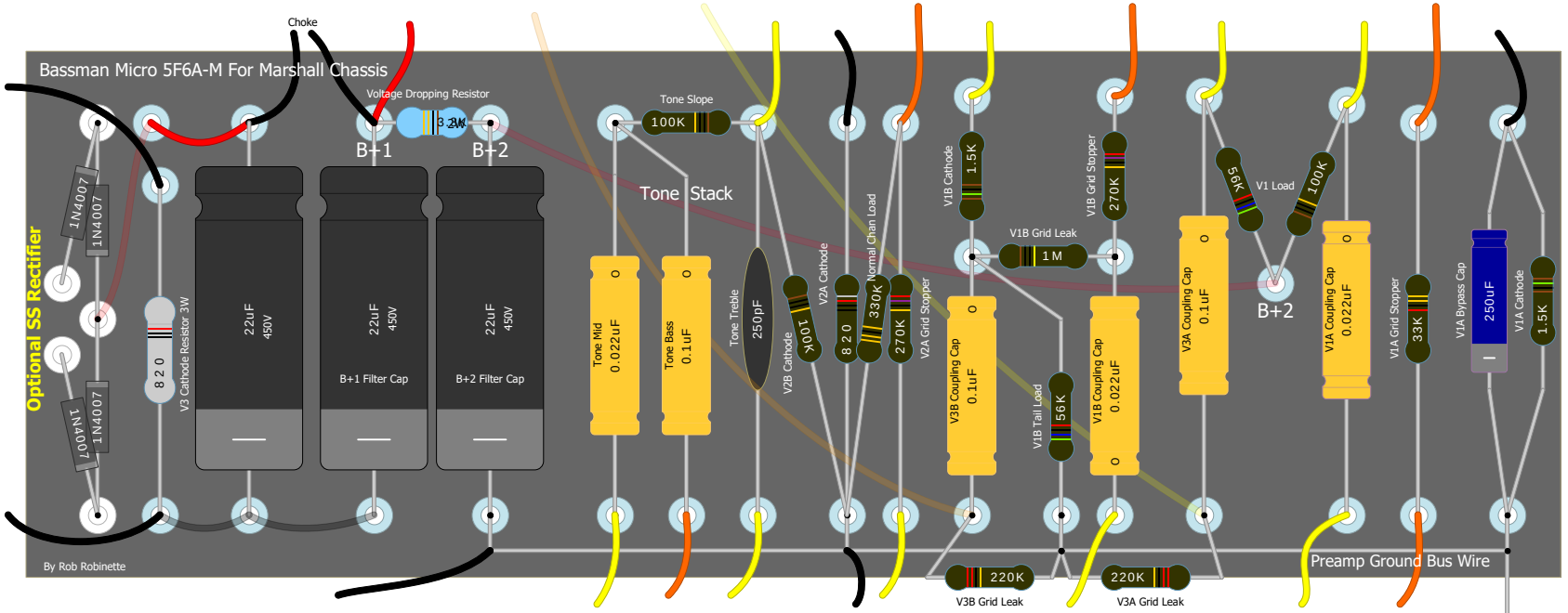
Bassman Micro 5F6A-M For Marshall Chassis
Choke
Voltage Dropping Resistor
3.3K
B+1
B+2
Tone Slope
100K
Tone Stack
Optional SS Rectifier
1N4007
1N4007
1N4007
1N4007
8 2 0
V3 Cathode Resistor 3W
22uF 450V
22uF 450V
22uF 450V
B+1 Filter Cap
B+2 Filter Cap
Tone Mid 0.022uF
Tone Bass 0.1uF
Tone Treble 250pF
V2B Cathode 100K
V2A Cathode 8 2 0
Normal Chan Load 330K
V2A Grid Stopper 270K
V1B Cathode 1.5K
V1B Grid Leak 1M
V1B Grid Stopper 270K
V3B Coupling Cap 0.1uF
V1B Tail Load 56K
V1B Coupling Cap 0.022uF
V3A Coupling Cap 0.1uF
56K
V1 Load
100K
B+2
V1A Coupling Cap 0.022uF
V1A Grid Stopper 33K
V1A Bypass Cap 250uF
V1A Cathode 1.5K
220K
V3B Grid Leak
220K
V3A Grid Leak
Preamp Ground Bus Wire
By Rob Robinette