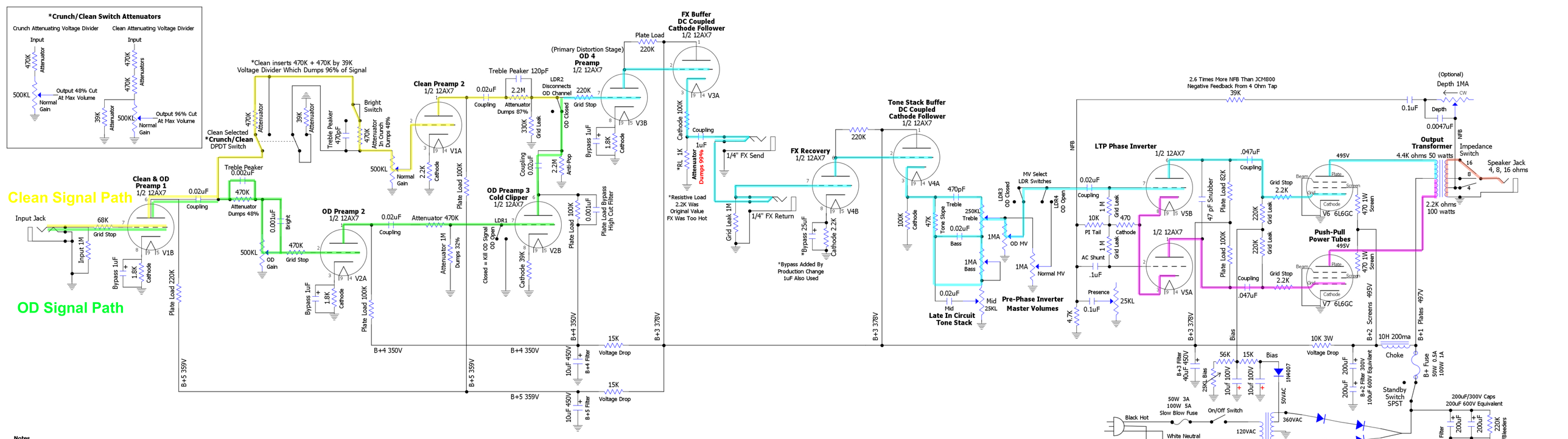


# Soldano Super Lead Overdrive SLO-100 & 50

**Switches Shown In OD Mode, Clean On, Bright Switch Off, Standby Closed**

**Notes**
Overdrive Mode = OD Switch Open or Footswitch Open = LDR2 & LDR3 ON
Clean Mode = OD Switch Closed or Footswitch Closed = LDR1 & LDR4 ON
Light Dependent Resistors (LDR) Are Vactec VTLSC1, LED + LDR Optisolator Switches
LDRs Are Used As Silent Switches - LED On = Switch On/Closed
Switches Shown In OD Mode, Clean On, Bright Switch Off, Standby Closed
Clean Channel Is Active & Parallel In OD Mode
Channels Are Out Of Phase With No Channel Mixing Resistors For Max Interaction
Crunch/Clean Switch Swaps Two Attenuating Voltage Dividers (see upper left of schematic)
OD Channel Is Deactivated In Clean Mode
FX Send Attenuator Dumps 99% Of Guitar Signal, FX Recovery Brings 80% Back
Bass Frequencies Are Attenuated By Partial Cathode Bypass, Not Coupling Cap Size
For High Voltage Bias Tap Insert 220K 1W Resistor Before Bias Diode
All Resistors Are Metal Film 1/2W 1% Unless Otherwise Noted
All Caps .002uF and Smaller Are Dipped Ceramic

Clean Signal Path = Preamp 1 + Crunch/Clean Attenuator + Clean Gain Pot + Clean Preamp 2 + Attenuator + Clean Preamp 3 + FX Buffer + Attenuator + FX Jacks + FX Recovery + Tone Stack Buffer + Tone Stack + Clean Master Volume + LTP + Power Tubes + Output Transformer + Speaker

Overdrive Signal Path = Preamp 1 + Parallel Channels { Clean/Crunch Attenuator + Clean Gain Pot + Clean Preamp 2 + Attenuator ; OD Attenuator + OD Gain Pot + OD Preamp 2 + Attenuator + OD Preamp 3/Cold Clipper } + OD Preamp 4 + FX Buffer + Attenuator + FX Jacks + FX Recovery + Tone Stack Buffer + Tone Stack + OD Master Volume + LTP + Power Tubes + Output Transformer + Speaker
(Channels Are Out Of Phase And No Mixing Resistors Used For Maximum Interaction In OD Mode)